SEMIKRON

innovation + service

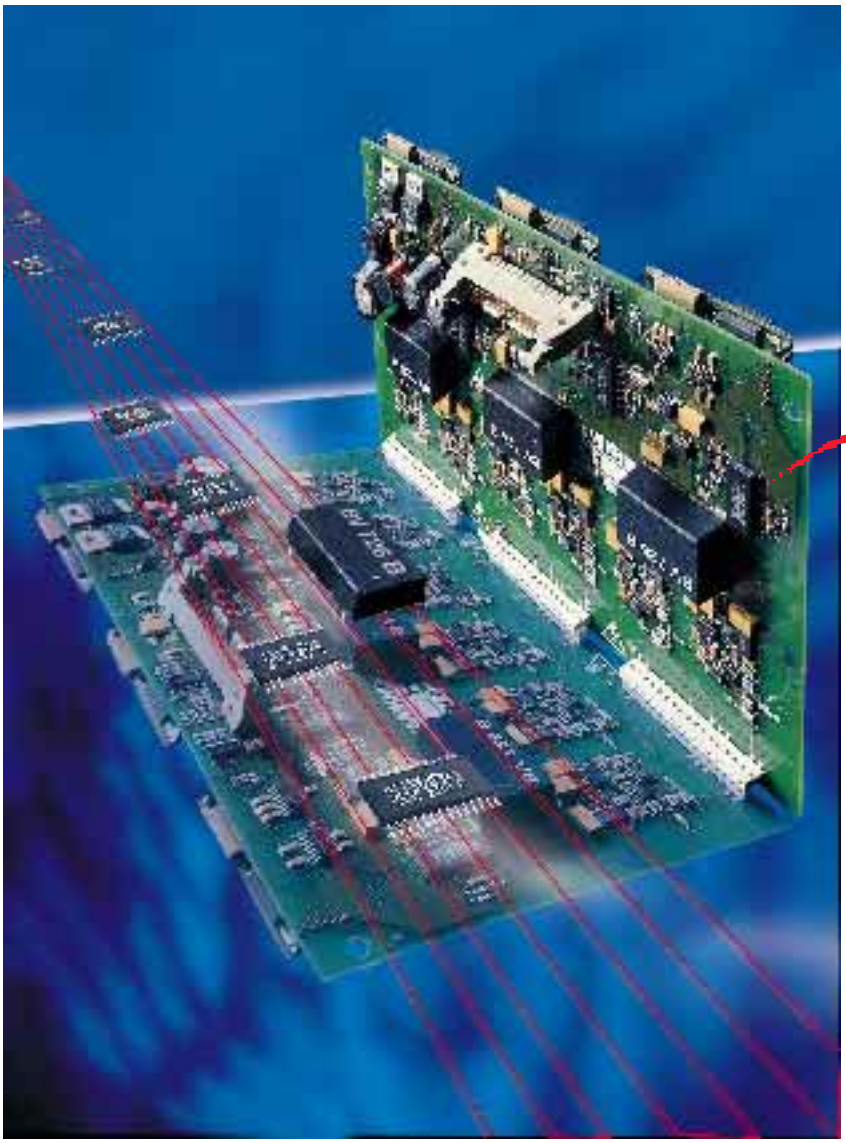

- ✓ plug + play
- ✓ protection
- ✓ easy interface
- ✓ integrated DC-DC converter
- ✓ 4kV isolation

IGBT and MOSFET

■ SKHI - Drivers ■

Integrated Components
and Integrated Solutions

SEMIKRON - IGBT/MOSFET Drivers SKHI
SEMIKRON - Driver ASICs SKIC

SKHI-Driver Family

		Features		
		PCB Driver	PCB mountable Driver	Primary side ASIC
Protection	• TOP BOTTOM Interlock	✓	✓	✓
	• Short Pulse Suppression	✓	✓	✓
	• V_{CEsat} Monitoring	✓	✓	
	• Undervoltage Monitoring	✓	✓	✓
Easy User Interface	• Optional TTL-compatible Input	✓	✓	✓
	• Very high EMI Immunity	✓	✓	✓
	• "Plug and Play"	✓		
Integrated DC-DC converter	• Very high dv/dt-Resistance	✓	✓	
	• High Isolation	✓	✓	

Profile of SKHI-advantages

- Needs only one non-isolated +15V power supply (even when using 3 drivers in 3-phase systems)
- Very high dv/dt capability by using magnetic transformers, up to 75 kV/µs
- Isolation between control/IGBT up to 4kV
- Output peak current capability up to 30A
- Interlock top/bottom avoids two IGBTs of same leg being switched-on at same time
- Dead-time, V_{CE}-supervision, $R_{GON/OFF}$ seperately adjustable to optimize for user's specific application
- Fault memory informs the control system via an error signal
- Supply undervoltage protection

SKHI details that make a difference

SKHI-drivers output stage

MOSFET output transistor pair, with reduced ohmic contact	→	Improves speed of turn-on and turn-off with reduced power losses
Integrated voltage source	→	Increased reliability
Regulated supply voltage	→	Provides full power output pulses without V_{GE} degradation

Under static operating conditions the IGBT needs no gate drive current because it is voltage controlled, but since the gate input has a large capacitance, a gate drive current of short duration pulses at turn on/off has to be generated.
In *fig.1* basic circuit drive of an IGBT is shown.

For a 75A/1200V device (e.g. SKM75GB123D) *fig.2* details the behaviour of V_{GE} and I_G. The peak gate current reaches approx 1.3A during the turn-on time (e.g. 200ns) and still has to charge the input capacitance without reducing V_{GE}, a feature which can only be achieved with a special out-

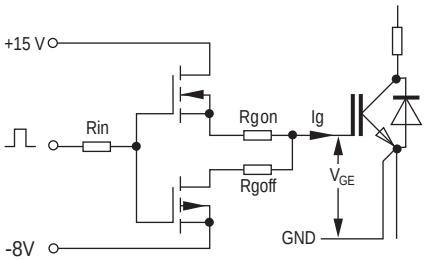

fig.1- Output stage of an IGBT driver

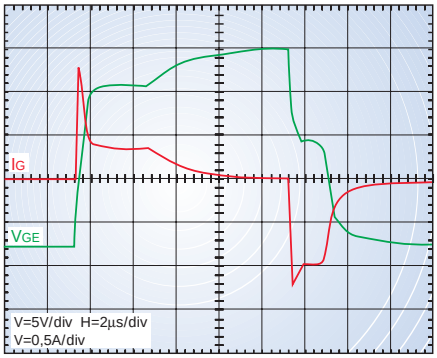

fig.2 SKM75GB123D
Output voltage V_{GE} and output current I_G

put buffer rather than an opto-coupler.

Another important point is how fast the IGBT can be switched. With gate charge Q_{on}, (Q_{off} respectively), the total power P_G needed to drive the IGBT may be calculated with the following simple equation:

$$P_G = V_{GE} \times f \times Q_{on} + |-V_{GE}| \times f \times Q_{off}$$

From this equation the maximum possible switching frequency f can be calculated.

The voltage of the driver output stage has to be kept stable all the time to achieve the lowest possible V_{CEsat} related losses.

Furthermore gate resistor R_G is important. It limits the amplitude of the gate current pulses during turn-on and turn-off. By varying R_G it is possible to control the switching losses. (Detailed informations are given in ➔ application)

SKHI short-circuit detection

V_{CE} trip level fixed to the IGBT in use (factory adjusted)	→	Easier engineering and handling
Adjustable delay time for the V_{CE} signal	→	Avoids false short circuit signal to the V_{CE} monitor
Error fault memory	→	Avoids repetitive high current peaks
Error signal output	→	Informs the main control board

When using an IGBT in an inverter circuit, short circuit breakdown of a device becomes an important protection parameter.

Over-currents are mainly caused by the following conditions:

- Short-circuited output
- Simultaneous switch-on of a pair of transistors from same leg
- Earth fault in the load circuit

The detection of the over-current as well as the processing of the response signal in the electronic monitoring stage requires a certain time. To prevent electrical components from undesired stress and to achieve a high degree of reliability, it is always an advantage to terminate the over-current as quick as possible. To perform this, the turn-off signal should be applied to the

driver stage of the IGBT with the shortest possible delay (<10µs). The detection of the overcurrent is made with V_{CE} - monitoring.
For the efficient detection of a short-circuit current the collector-emitter voltage (V_{CE}) of an IGBT can be utilized because it rapidly increases as a result of desaturation.

During short circuit the V_{CE} detection circuit always monitors the input "on-signal" and the collector-emitter voltage; when the input signal is high after 3 ... 5µs V_{CE} is higher than the normal value range the output signal turns off (*fig.3*).

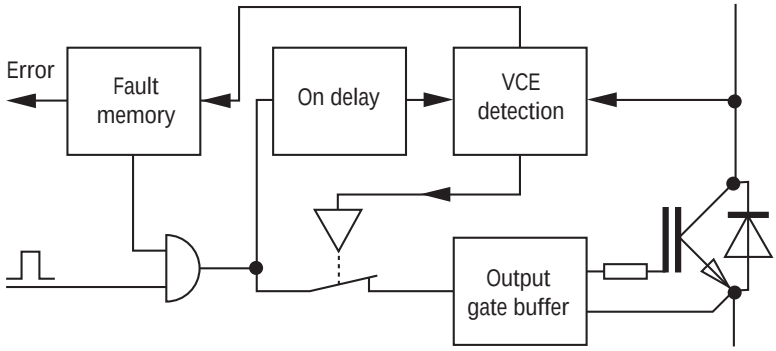

fig.3 - Short-circuit detection

SKHI potential isolation

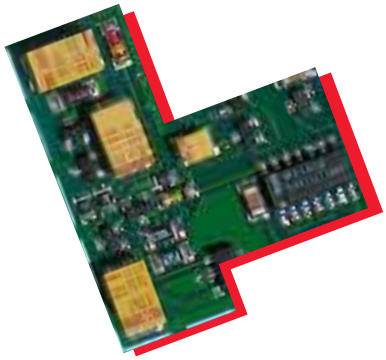

Using coated toroid ferrite transformers. → Provides high isolation between input and output (up to 4kV, drives IGBTs up to 1700V)

High dv/dt capability by using isolated transformers instead of opto-couplers. → High dv/dt immunity between primary and secondary side (up to 75kV/µs).

The elements of the control system (IC, µP, etc.) operate always at a low voltage level of between 5V to 15V and, therefore, noise voltages may influence their function. For this reason it is an advantage to place the interface for potential separation in the control section between the electronics and driver stage.
In the case of two-pulse or six-pulse inverter bridge circuits the relatively fast turn on and turn off of the IGBTs cause steep voltage steps (high dv/dt values).
Therefore it has to be taken

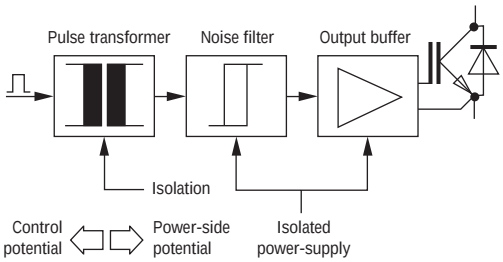

fig.4 - Potential separation with signal transformer

into account that even if the interface is located favourably, disturbances may still occur. The reasons for this are:

• Noise signals can reach the control system via the internal capacitive coupling of the device used for electrical isolation, noise signals may disturb the control system.

• In the forward direction the same noise signals cause unwanted oscillations, particularly in the case of commercial grade opto-couplers, due to the high coupling capacitance and relatively high-resistive termination.

Signal transformers are therefore best suited to transmit the information to the respective driver stages. As compared with opto-couplers they are distinctly less noise sensitive. Moreover, they offer less problems to achieve a higher isolation voltage (*see fig.4*).

SKHI auxiliary power supply

Internal DC/DC converter with isolated ferrite transformers	→ Powerful voltage supply that saves external transformers and allows a compact design
Under-voltage supervision on the primary side	→ Guarantees a safe and powerful pulse trigger at the IGBT gate
Independent power supply per IGBT with very low coupling capacitance	→ Improves the immunity between switching signals

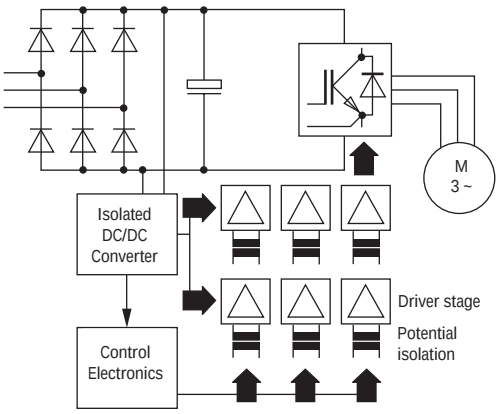

fig.5 - Auxiliary power supply for a 3-phase inverter

The use of big mains transformers (50/60Hz) would always require secondary connected stabilisation networks with voltage regulators (and big capacitors) to compensate for the voltage fluctuations.
Since the voltage supply is often needed for several control sections this design can be very impractical.
The use of a central RF-generator from f > 50kHz with approximately constant alternating output voltage, eliminates the above mentioned problems and leads to six considerably smaller transformers with relatively low capacitive coupling .

Product range - Single Driver

SKAI 100

Features:

- PCB driver
- SMT (Surface Mounted Technology)
- 15V and 24V power supply
- self controlled switching mode
- external switching signal also possible
- short circuit protection via V_{CE} monitoring
- supply undervoltage protection
- overtemperature protection possible
- error memory
- isolation voltage up to 3,5 kV_{AC}

The brake chopper driver SKAI 100 is for driving SEMIKRON IGBT type "SKM...GAL...".
The brake chopper levels can be adjusted to the application.
The SKAI 100 is preset for line voltage of 400V.
The SKAI 100 has a circuit integrated which allows the self controlled switching of the IGBT determined only by the brake resistor. External switching is also possible.
V_{Gon}= +15V
V_{Goff}= 0V.

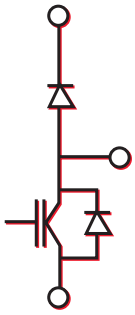

chopper circuit

SKHI 10

Features:

- PCB driver
- SMT (Surface Mounted Technology)
- 15V power supply
- 5V(TTL) and 15V(CMOS) control signals
- short circuit protection via V_{CE} monitoring
- soft short circuit turn-off
- supply undervoltage protection
- error memory
- error output signal (high or low logic possible)
- isolation voltage 4kV_{AC}

The driver SKHI 10 is for driving all single IGBTs up to V_{CES} = 1700V.

Two versions are available. SKHI10 drives IGBTs up to V_{CES}=1200V. SKHI10/17 drives IGBTs up to V_{CES} =1700V.
5V or 15V input signals, high or low logic error signal feedback, separate reset signal for the error memory, easy adjustment of $R_{Gon/off}$ offers big flexible adaptability according to the application needs.
V_{Gon}= +15V
V_{Goff}= -8V.

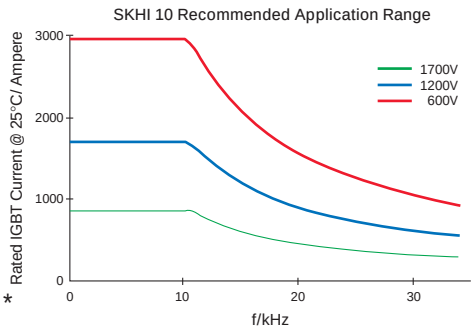

** given for SEMIKRON IGBT-devices*

Product range - Dual Driver

SKHI 21/22

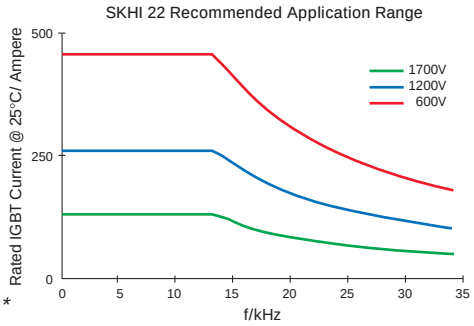

SKHI 21/22 with SKPC2006

Features:

- PCB-mountable
- hybrid technology
- 15V power supply
- 15V (CMOS) control signals
- short circuit protection via V_{CE} monitoring
- error memory
- interlock of TOP and BOTTOM switch
- supply undervoltage protection
- isolation up to $4kV_{AC}$
- in single channel operation double power

The hybrid driver SKHI 21/22 is made for soldering into a printed circuit board.

Switching on the IGBT is made with +15V.
V_{Goff} of the SKHI 21 is 0V,
V_{Goff} of the SKHI 22 is -15V.
SKHI 21 drives IGBTs up to V_{CES} = 1200V.
SKHI 22 drives IGBTs up to V_{CES} = 1700V.
SKHI 21 is particularly designed to drive MOSFETs (U_{DS} < 10V)
The printed circuit board SKPC 2006 is an universal PC-board for the driver SKHI 21/22.

SKPC 2006 is prepared to carry all external devices neccessary to adapt to the application.
The output connectors are positioned for auxiliary connections to SEMITRANS 3 modules.

SKHI 21A/22A/B

NEW

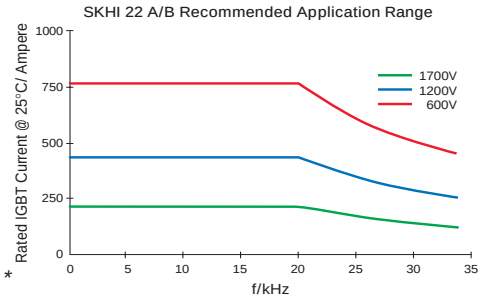

SKHI 21/22A

full compatible design to SKHI 21/22 but

- nearly double output power
- V_{Goff} of the SKHI 22A is -8V

SKHI 22B

same principal design as the SKHI 22 except

- variable dead time
- optional 5V-control-levels
- nearly double output power
- V_{Goff} of the SKHI 22B is -8V

** given for SEMIKRON IGBT-devices*

SKHI 23

Features:

- PCB driver
- SMT (Surface Mounted Technology)
- 15V power supply
- 5V(TTL) or 15V(CMOS) control signals
- short circuit protection via V_{CE} monitoring
- soft short circuit turn-off
- supply undervoltage protection
- error memory
- error output signal (high or low logic possible)
- interlock of TOP/BOTTOM (deadtime adjustable)
- isolation voltage $4kV_{AC}$

SKHI 23 is available in two versions.

SKHI 23/12 drives IGBTs up to V_{CES} = 1200V.
SKHI 23/17 drives IGBTs up to V_{CES} =1700V.

V_{CE} trip level is preset to 5,2V for the SKHI 23/12 and 6,3V for the SKHI 23/17.
5V or 15V input signals, high or low logic error signal feed-back, easy adjustment of $R_{Gon/off}$ offers flexible adaptation according to the application. This adaptation can be easily done by soldering additional electronic devices onto reserved pins on the PC- board.
SKHI 23 is coated with varnish to protect against moisture and dust.
V_{Gon} = +15V
V_{Goff} = -8V.

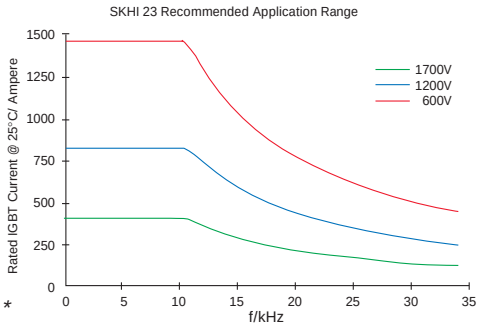

SKHI 26

Features:

- PCB driver
- SMT (Surface Mounted Technology)
- 15V power supply
- 15V (CMOS) control signals
- SKHI 26 W has wire connector
- SKHI 26 F has fibre optic control connector
- short circuit protection via V_{CE} monitoring and soft turn-off
- supply undervoltage protection
- interlock of TOP/BOTTOM
- isolation voltage $2,5\ kV_{AC}$

SKHI 26 is a high power dual driver for driving IGBT moduls up to V_{CES} = 1200V.
SKHI 26W uses wire connectors to transfer the control signals. SKHI 26 F uses fibre optic connectors to transfer the control signals.
V_{Gon} = +15V
V_{Goff} = -8V.

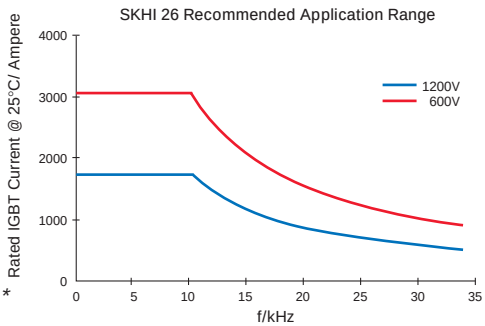

** given for SEMIKRON IGBT-devices*

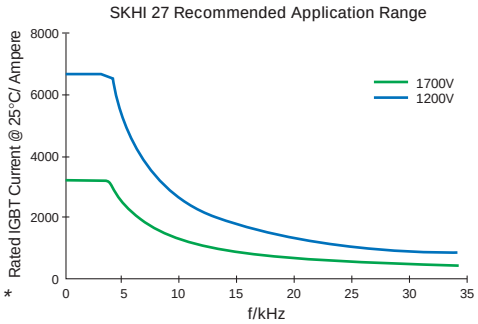

SKHI 27

Features:

- PCB driver
- 15V power supply
- 15V (CMOS) control signals
- SKHI 27 W has wire control connector
- SKHI 27 F has fibre optic control connector
- short circuit protection via V_{CE} monitoring
- supply undervoltage protection
- interlock of TOP/BOTTOM
- isolation voltage 4 kV_{AC}

SKHI 27 is a high power dual driver for paralleling a big number of IGBT modules.
For driving IGBTs, 2 versions are available.
SKHI 27 W uses wire connectors to transfer the control signals. SKHI 27 F uses fibre optic connectors to transfer the control signals.
V_{Gon} = +15V
V_{Goff} = - 8V

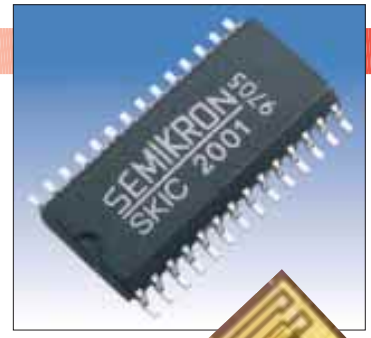

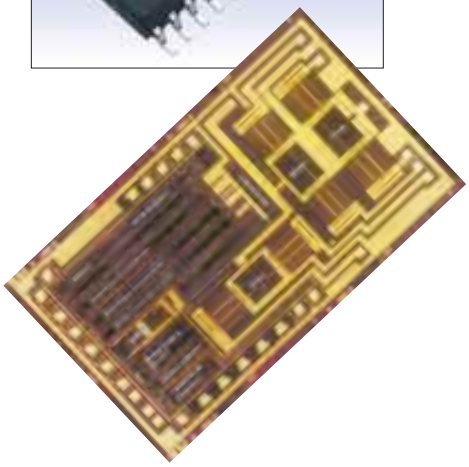

Product range ASIC

SKIC 2001 / SKIC 6001

NEW

Features:

- 15V/5V power supply
- high voltage MOSFET technology
- selectable interlock time
- V_{CE} error input
- overcurrent error input
- signal transfer via magnetic transformers or opto-couplers possible
- supply undervoltage monitoring

The ASIC SKIC 2001 for half-bridge application and SKIC 6001 for three phase bridge application comprises the primary side functions of a modern intelligent IGBT/MOSFET-driver.
They include several protection and monitoring functions, such as short pulse suppression, interlock of TOP and BOTTOM IGBT, undervoltage monitoring of the supply voltage as well as a common error processing.
An integrated high frequency DC-DC converter driver reduces complexity of isolated power supply.
Switching signals can be transferred via magnetic transformers or opto-couplers to reach high levels of dv/dt and isolation.
For doing first tests with SKIC 2001, SEMIKRON offers evaluation boards with the ASIC included. LEDs will indicate the status of signals.
Suitable isolation transformers for customer specific drivers are available.

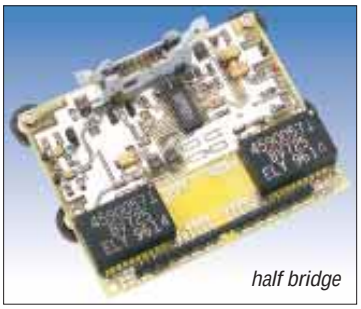

Evaluation board

** given for SEMIKRON IGBT-devices*

Product range - Sixpack Driver

SKHI 61

NEW

Features:

- PCB mountable driver
- hybrid technology
- easy design with MiniSKiiP®, SEMITRANS®, ECONOPACK
- 5V/15V control signals
- short circuit protection via V_{CEsat} monitoring
- error memory
- supply undervoltage monitoring
- variable interlock time TOP/BOTTOM (0-4µs)
- isolation voltage 2,5 kV_{AC}
- max. DC link voltage 850V
- V_{Gon}=15V, V_{Goff}=-8V
- optional integrated brake chopper driver available

The sixpack driver SKHI 61 drives IGBT up to V_{CES}=1200V.

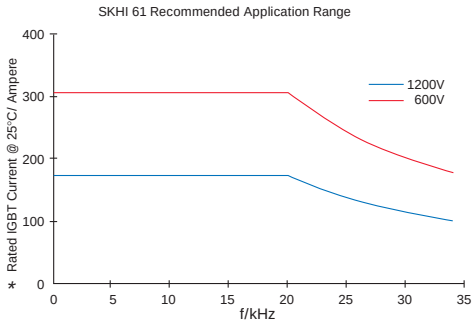

Driver kit SKHIBS 01/02

Features:

- PCB-mountable
- 15V power supply
- 5V/15V control signals
- +15 V/-8 output voltages
- temperature monitoring
- brake chopper driver integrated
- opto-coupler inputs
- supply undervoltage monitoring
- isolation voltage 2,5 kV_{AC}

Two subprints together with a mag. transformer represent the SEMIKRON driver kit SKHIBS. The driver kit is for soldering into a printed circuit board. SKHIBS 01 is for driving IGBTs without protection. SKHIBS 02 also protects the IGBT with SEMIKRON driver principle "OCP" - Over Current Protection, using closed loop current sensors.

These drivers are particularly suitable for driving MiniSKiiP® 8 as well as SEMITRANS® six-packs or sevenpack modules. SKHIBS 01/02 drives 1200V IGBTs up to 120A at 20 kHz.

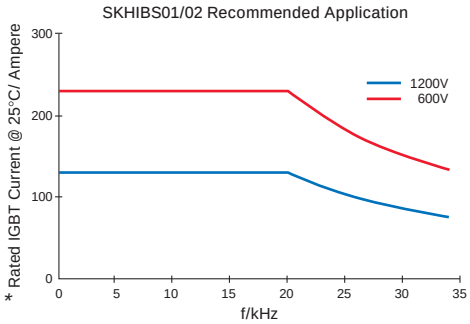

** given for SEMIKRON IGBT-devices*

SEMIKRON technical application service

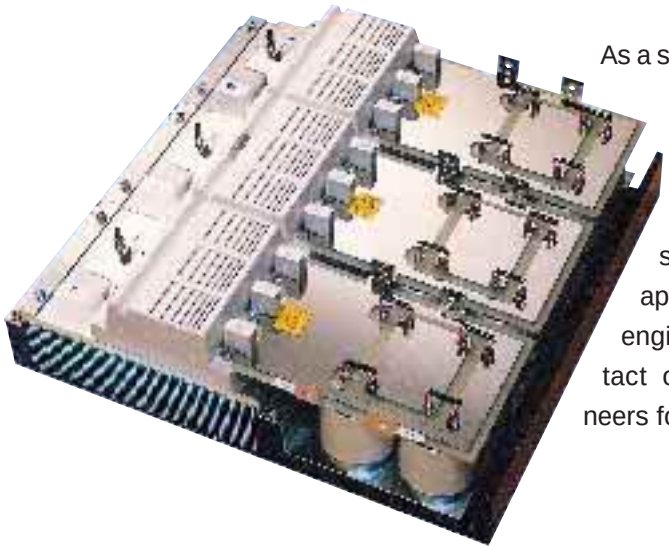

As a supplier of a broad line of power IGBTs/ MOSFETs and drivers, we are able to give you valuable support for your power application. To save your engineering time just contact our application engineers for design in support.

- Input rectifiers/inverters
- DC link bus bars design with capacitors
- IGBT/MOSFET modules
- Drivers
- Heatsinks with/without fan
- Specific circuit designs
- SKiiPPACK®
- MiniSKiiP®

Applications

AC-motor inverter with discrete drivers

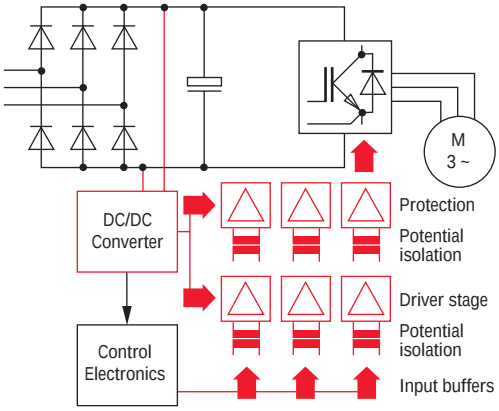

High current power supplies with discrete drivers

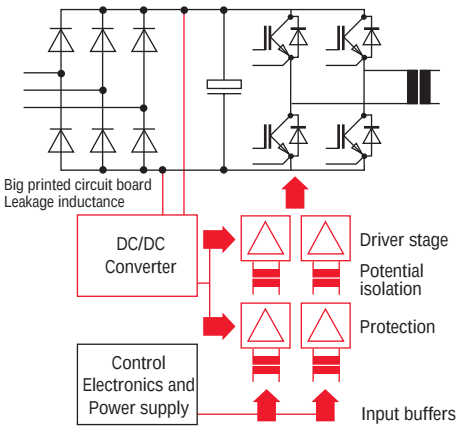

AC-motor inverter with SKHI drivers

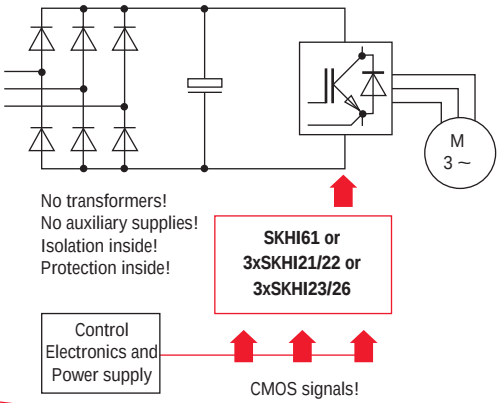

High current power supplies with SKHI drivers

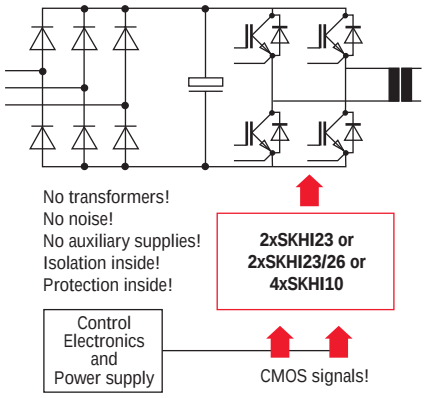

Application

Selection of the suitable driver

To find the suitable driver, which is able to drive the IGBT, some details need to be considered.

1. The calculation of the maximum switching frequency - The driver must be able to provide the necessary power (output current)

The individual power of each internal supply necessary to drive the IGBT can be found as a function of the intended switching frequency and the energy which has to be used for charging and discharging the IGBT.

The necessary driver energy E can be found from the marked area, shown in *fig.6:*

$E=\Delta Q * \Delta U$

The switching energy per cycle for a SKM 200 GB 123 D is calculated at:

E=[870nC-(-260nC)] * [15V-(-8)]

E=25,99 µJ

The necessary output power P of the driver now can be calculated with:

$P=E * f_{sw}=\Delta Q * \Delta U * f_{sw}$

The average output current $Iout_{AV}$ is defined by:

$P=Iout_{AV} * \Delta U$

The comparison of the two equations for the output power P leads to the relation between

ΔQ, $Iout_{AV}$ and f_{sw}:

$\Delta Q=Iout_{AV}/f_{sw}$

With the data sheet value ΔQ for the IGBT and $Iout_{AV}$ given in the data sheet of the driver the maximum permissable switching frequency f_{swmax} can be calculated.

Using the driver SKHI 23/12 with $Iout_{AV}$=50mA leads to

$f_{swmax}=Iout_{AV}/\Delta Q$

f_{swmax}=50mA / 1130nC

f_{swmax}=44kHz

According to the calculation the driver is able to drive SKM 200 GB 123D with a maximum switching frequency of 44kHz.

Using the driver SKHI 22 with $Iout_{AV}$=20mA then f_{swmax} will be:

$f_{swmax}=Iout_{AV}/\Delta Q$
f_{swmax}=20mA / 1130nC
f_{swmax}=17,7kHz

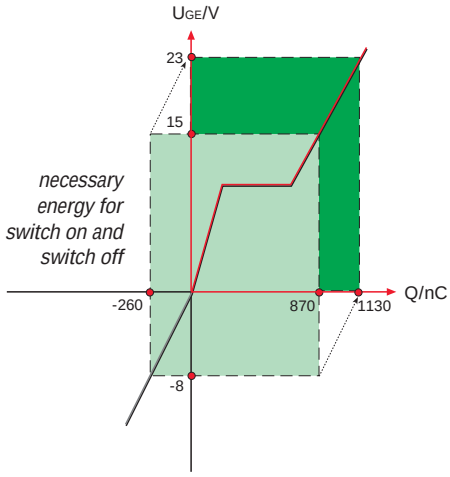

fig.6 gate charge characteristic, e.g. SKM 200 GB 123

- *red lines (positive quadrant) is area of diagram as given in data sheets*
- *bright green: actual energy for switch on and switch off with plus 15V U_{GE}, -8V U_{GE}*
- *dark green: adjustment of bright green into the positive quadrant to easily obtain ΔQ reading out of the diagram as given in data sheets*

SEMIKRON IGBT module SKM 200 GB 123D

2. The calculation of minimum R_{Gon} and R_{Goff}

The IGBT switching time is controlled by charging and discharging the IGBT's input capacitance.
Increasing the gate peak current (with R_{Gon} and R_{Goff} the gate charge currents can be controlled) the turn-on and turn off time will be shorter and the switching losses will be reduced.

The maximum peak current $Iout_{PEAK}$ can be calculated with the following relation:

$$Iout_{PEAK}=[V_{G(on)} - V_{G(off)}]/Rg$$

In the data sheets of SKHI drivers the minimal gate resistors R_{Gonmin} and $R_{Goffmin}$ are given. These values have to be considered to optimize the gate drive circuit.

3. The determination of maximum gate charge per pulse

The output capacitors of the driver must be able to support the necessary energy for charging and discharging the gate of the IGBT in use.
The capacitors on the driver deliver the peak current for charging the IGBT. For this reason the output capacitors of the driver must be large enough for the gate charge Q_G of the IGBT. The limitation of the maximum charge per pulse is given by these capacitors. In the data sheets of SKHI drivers this maximum charge per pulse $Q_{out/pulse}$ is given.

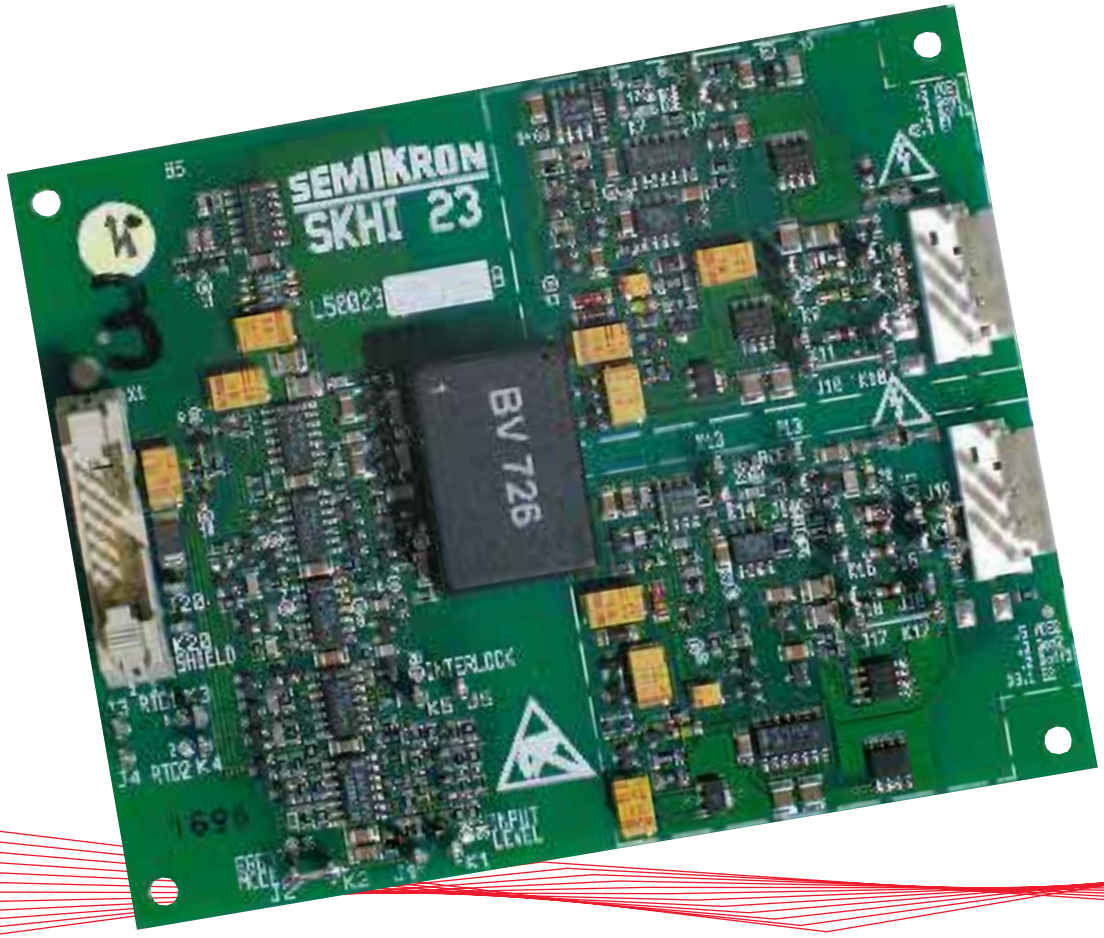

Overview

IGBT and MOSFET drivers SKHI, driver Asics SKIC

Characteristics and features ▲ new type	Symbol	Types SKHI 10 10/17	21 21H4	21A 21AH4	22 22H4	▲ 22A/B[6] 22A/BH4	23/12 23/17	26W 26F	27W 27F	▲ 61[6]	▲ SKHIBS01[6]/ SKHIBS02	▲ SKAI100	▲ SKIC2001/ SKIC6001[4) 6)]	Unit
Input signal voltage	V_{iH}	15/5	15	15	15	15/5	15/5	15	15	15/5	15/5	15	15/5	V
Supply voltage prim.	V_s	15	15	15	15	15	15	15	15	15	15	15/24	15/5	V
Supply current max.	I_s	500	160	290	160	290	500	700	1200		430/700	77	15/3[7]	mA
Isolation volt. (AC;rms;1min)	V_{isol}	4	2,5	2,5	2,5	2,5	4	2,5	4	2,5	2,5	2,5	-	kV
Isol. volt. (AC;rms;1min) "H4"	V_{isol}	-	4	4	4	4	-	-	-	-	-	-	-	kV
Output voltage on	V_{Gon}	15	15	15	15	15	15	15	15	15	15	15	-	V
Output voltage off	V_{Goff}	-8	0	0	-15	-8	-8	-8	-8	-8	-8	0	-	V
Output current peak max.	I_{Gp}	8	3,3	8	3,3	8	8	8	30	2	1	1,5	-	A
Output current av. max	I_{out}	100	40	40	20	40	50	100	150	20	15	90	-	mA
Delay time (typ.)	t_{doff}	1,4	1	1	1	1	1,4	1	1	1	0,3	<20	<1	µs
V_{CEmax} (sense)	V_{CE}	1200/ 1700[3]	1200	1200	1700	1700	1200/ 1700[3]	1200	1200[5]	1200[2]	1200	1700	-	V
Rate of rise of V_{CE}	dv/dt	75	25[1]	50	25[1]	50	75	75	50	15	15	50	-	kV/µs
Length	L	124	55	55	55	55	124	163	200					
Width	B	66	55	55	55	55	99	93	120					
Height	H	14	14	14	14	14	14	27	27					
technology:		SMT	Hybrid	Hybrid	Hybrid	Hybrid	SMT	SMT	SMT	Hybrid	subprints +transformer	SMT	ASIC	
FOR POWER CIRCUIT TOPOLOGY		SINGLE switch	halfbridge	halfbridge	half- bridge	half- bridge	half- bridge	half- bridge	half- bridge	SIXPACK[2]	SIXPACK +brake chopper	SINGLE brake chopper	primary side of IGBT/MOSFET driver	
Interlock top/bottom					•	•	•	•	•	•	•			
Fibre optic input "F"								"F"	"F"					
Short circuit soft switch-off		•					•	•	•					
Common features:	CMOS compatible inputs Short circuit monitoring and switch off Supply undervoltage monitoring Vs<13V Isolation primary/secondary by pulse transformer Error latch and monitoring output signal Internal isolated power supply										Features: input signals via opto-couplers. SKHIBS02 has several protection features	Features: • short circuit monitoring • self controlled switching error latch • internal isolated power supply • control of dc link voltage	Features: • Interlock of TOP/BOTTOM • short pulse suppression • temperature monitoring • supply undervoltage monitoring V_{CE} error protection • error monitoring	

1) TOP switch (BOTTOM switch has 10kV/µs)
2) brake chopper driver optional
3) SKHI 10 and SKHI 23/12 drives IGBTs up to 1200V
SKHI 10/17 and SKHI 23/17 drives IGBTs up to 1700V
4) SKIC2001 for halfbridge application
SKIC6001 for threephase bridge application
5) for using with 1700V-IGBT on request
6) preliminary data
7) SKIC 2001

	Country, City	Intnl.	Tel.(national)	Fax (national)
A	Östereich, Wien	+43	01-586 3658	01-586 3650 32
AUS	Australia, Mulgrave Vic (Melb.)	+61	03-9561 3044	03-9561 8769
B	Belgique, Bruxelles	+32	02-721 5350	02-725 3424
BR	Brasil, Carapicuiba/Sao Paulo	+55	011-7287 0055	011-7287 3567
BR	Brasil, Sorocaba	+55	015-232 3253	015-233 1376
CH	Schweiz/Suisse, Küsnacht (ZH)	+41	01-9141333	01-9141330
CHN	China, VR, Qingdao	+86	0532-8701773	0532-8701478
CZ	Cesko, Brumov: TNZ	+42	657-98446	657-98446
D	Deutschland, Nürnberg	+49	911-6559 0	911-6559262
D	Baden-Württ., Dettenhausen	+49	7157-561 956	7157-561 955
D	Hessen/Saar/Pfalz	+49	6201-393 090	6201-393 092
D	Nordbayern, Emskirchen	+49	9104-3888	9104-3811
D	Nordr.-Westfalen, Neumarkt	+49	9181-261033	9181-261034
D	Ostdeutschland, Dresden	+49	351-650 3300	351-650 3309
D	Schlesw./Nieders., Bremen	+49	421-256 029	421-252 170
D	Südbayern, Augsburg	+49	821-433 062	821-436 904
DK	Danmark, Stenløse (København)	+45	48-195 044	48-183 837
E	España, Barcelona	+34	93-410 0421	93-321 0141
EST	Eesti/Estland, Tallinn (Reval)	+358	09-870 1266	09-870 1308
ET	Egypt, Kairo	+20	02- 258 4860	02- 256 2861
F	France, Sartrouville (Paris)	+33	01- 3086 8000	01- 3915 1083
FIN	Suomi-Finland, Vantaa (HEL)	+358	09- 870 1266	09- 870 1308
GB	United Kingdom, Hertford (LON)	+44	01992- 584 677	01992- 554 942
H	Magyarország, Budapest	+36	01- 285 3502	01- 285 3503
HKG	Hong Kong, Hongkong	+85	22365 3231	22365 0476
I	Italia, Pomezia (Roma)	+39	06- 911 4241	06- 912 1138

	Country, City	Intnl.	Tel.(national)	Fax (national)
IL	Israel, Tel-Aviv: RACOM	+972	035776800	035795522
IND	India, Mumbai (Bombay)	+91	22- 7619745	22- 7616817
J	Japan, Tokyo	+81	3- 5639 5075	3- 5639 5708
LV	Latvia, Riga		+358-9-870 1266	+358-9-870 1308
LT	Lietuva, Vilnius		+358-9-870 1266	+358-9-870 1308
MEX	Mexico, Naucalpan de Juarez	+52	5-300 7922	5-300 0364
NL	Nederland, Wormerveer (AMS)	+31	55- 529 5295	55- 529 5290
NZ	New Zealand, Auckland	+64	09- 473 2180	09- 473 2181
P	Portugal, Lisboa	+351	1- 3224 160/3	1- 3224 169
PL	Polska, Wroclaw	+48	071- 442 532	071- 441 141
RA	Argentina, Buenos Aires	+54	01- 709 0069	01- 709 0066
RC	Taiwan, Taipeh	+886	02- 758 0533	02- 729 4800
RCH	Chile, Santiago de Chile	+56	02- 221 9599	02- 221 9599
RI	Indonesia, Jakarta	+61	03-9561-3044	03-9561-8769
ROK	Korea, Puchon City (Seoul)	+82	032- 346- 2830/3	032- 346- 2834
RUS	Russia (ROSSIA), Moskva	+7	095-305 77-38	095-305 77-48
S	Sverige, Sollentuna (Stockholm)	+46	08- 754 9155	08- 754 8592
SA	South Africa, Arcadia/Pretoria	+27	012- 333 3733	012- 333 5061
SGP	Singapore, Singapore	+65	298 8566	292 4718
SK	Slovensko, Nova Dubnica: INS	+421	0 827 232 97	0 827 232 97
SLO	Slovenia, Ljubljana	+386	61- 189 5214	61- 189 5203
T	Thailand, Bangkok	+66	02- 757 8222	02- 394 1880
TR	Türkiye, Istanbul	+90	212- 254 5405	212- 250 6590
USA	USA, Hudson NH	+1	603- 883 8102	603- 883 8021
VN	Vietnam, Ho Chi Minh	+84	08- 864 1640	08- 835 3634
YV	Venezuela, Caracas	+58	02- 263 3135	02- 261 4245

SEMIKRON
innovation+service

SEMIKRON INTERNATIONAL Dr.Fritz Martin GmbH & CO.KG
D-90253 Nürnberg, Deutschland • Tel: +49 911-6559-0 • Fax: +49 911-6559-262 • e-mail: sales.skd@semikron.com
Visit us: http://www.semikron.com

E 11232270 4/98