Absolute Maximum Ratings Ta = 25 °C

Symbol	Term	Value	Units
V_S	Supply Voltage primary	15,6	V
V_{IH}	Input signal Voltage High (5 V input level)	6.5	V
V_{CE}	Collector-Emitter-Voltage	1200	V
dv/dt	Rate of rise and fall of voltage (secondary to primary side)	15	kV/ms
$V_{isol\ IO}$	Isol. test voltage IN-OUT (2 sec. AC)	2500	V
T_{op} / T_{stg}	Operation Temp.	0 ... + 70 [1]	°C
	Storage Temp.	0 ... + 70 [1]	°C
Sixpack Circuit			
$I_{OUT\ peak}$	Output peak current	1,5	A
I_{OUTAV}	Output average current (max)	15	mA
f_{sw}	Switching frequency (max)	20	kHz
R_{IN}	Input resistance	500	W
R_{gmin}	Minimum gate resistor	18 [8]	W
$Q_{OUT/pulse}$	Charge per pulse	0.750	mC
Brake Chopper Circuit			
$I_{OUT\ peak}$	Output peak current	1	A
I_{OUTAV}	Output average	8,4	mA
R_{IN}	Input resistance	500	W
f_{sw}	Switching frequency (max)	20	kHz
R_{gmin}	Minimum gate resistor	15	W
$Q_{OUT/pulse}$	Charge per pulse	0.42	mC
$T_{TRIPBRC}$ [2]	Triplevel temp.-monitoring	115 ± 5 [3]	°C

Electrical Characteristics T_a = 25 °C

Symbol	Term	min	typ	max	Units	remark
V_S	Supply voltage primary	14.4	15.0	15.6	V	Pin 11
I_S	Supply current max		0.43		A	
I_{SO}	Supply current primary standby		0,165		A	
V_{iH5V} [4]	Input voltage 5 V input level		5		V	
V_{iH15V} [4]	Input voltage 15 V input level		15		V	Rv=1kΩ
$V_{iInhibit\ off}$	Inhibit voltage off		< 5		V	
Sixpack Circuit						
$V_{G(on)}$	Turn-on gate voltage		+ 15		V	
$V_{G(off)}$	Turn-off gate voltage		- 8		V	
$t_{d(on)\ IO}$	Input-Output turn-on propagation time		0.3		ms	
$t_{d(off)\ IO}$	Input-Output turn-off propagation time		0.3		ms	
Brake Chopper Circuit						
$V_{G(on)}$	Turn-on gate voltage		+ 15		V	
$V_{G(off)}$	Turn-off gate voltage		0		V	
V_{GESTAT}	Reference voltage for V_{CE}-monitoring		5,3		V	
V_{OL} [5]	logic low output voltage		500		mV	10 mA
V_{OH} [5]	logic high output voltage		30		V	
$t_{d(on)\ IO}$	Input-Output turn-on propagation time		3.9		ms	
$t_{d(off)\ IO}$	Input-Output turn-off propagation time		6.4		ms	
$t_{d(err)\ Gate}$ [6]	Error input-output propagation time		3.2		ms	V_{CEBRC}
$t_{d(err)\ ovr}$ [7]	Error input-output propagation time		6.7		ms	

SEMIDRIVER®
IGBT Driver kit
SKHIBS 01

Preliminary Data

General Features

- driver for sixpack and sevenpack up to V_{CES} = 1200 V
- used together with the transformer
- Inhibiting signal
- ERROR output (open collector transistor)

Sixpack circuit

- input signals transferred via opto couplers
- turn on voltage + 15 V / turn off voltage - 8 V
- separate, insulated supply voltage for the 3 TOP switches
- common, insulated supply voltage for the 3 BOT switches

brake chopper circuit

- driver for BRC - IGBT
- V_{CE} monitoring for brake chopper IGBT
- temperature monitoring (external adjustable) for BRC - IGBT
- turn on voltage + 15 V / turn off voltage 0 V
- isolation via opto couplers

[1] - 25 °C ... + 85 °C on request
[2] If temperature monitoring in use Trip level can be adjusted with an external resistor
[3] factory adjusted
[4] R_{in} = 500 W
[5] open collector output, external pull-up resistor
[6] time for shut off the gates when failure occur
[7] time between failure occur and information available at output $\overline{\text{ERROR}}$ (Pin 8)
[8] at 20 kHz switching frequency

SEMIDRIVER ®
SKHIBS Driver kit
Subprints for soldering into a printed circuit board

Preliminary Data

subprint

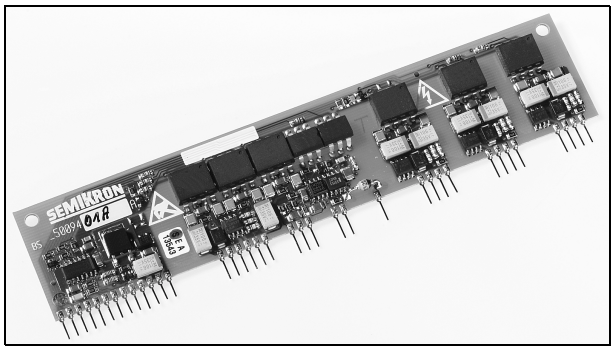

Sixpack circuit
+ brake chopper circuit

transformer

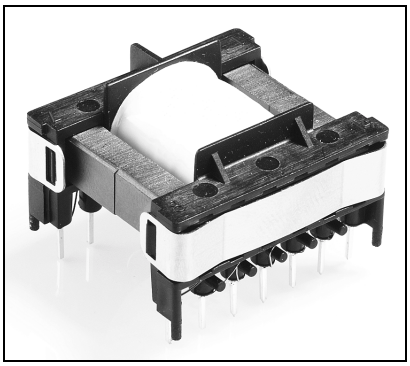

SKHIBS 01

Overview SEMIKRON driver SKHIBS 01

The SEMIKRON driver kit SKHIBS consists of 1 subprint and 1 transformer, which have to be soldered into a printed circuit board (PCB).

Subprint together with the transformer can be used for driving max. 7 IGBTs, e.g. a sixpack or a sixpack with brake chopper.

SKHIBS drives IGBTs up to V_{CES} =1200 V. The output capability was designed to drive 120 A IGBTs up to 20 kHz.

The power supply for the driver kit may be the same used for the control board (15 V ± 0.6 V), without the requirements of insulation. The signals (inverter) between primary side and secondary side are transmitted via opto couplers (also used for insulation) with a dv/dt > 15 kV/msec.

Operation (storage) temperature is from 0 °C to + 70 °C, (- 25 °C to + 85 °C on request).

To protect the subprints against moisture and dust they are coated with varnish.

SKHIBS 01 Block Diagram

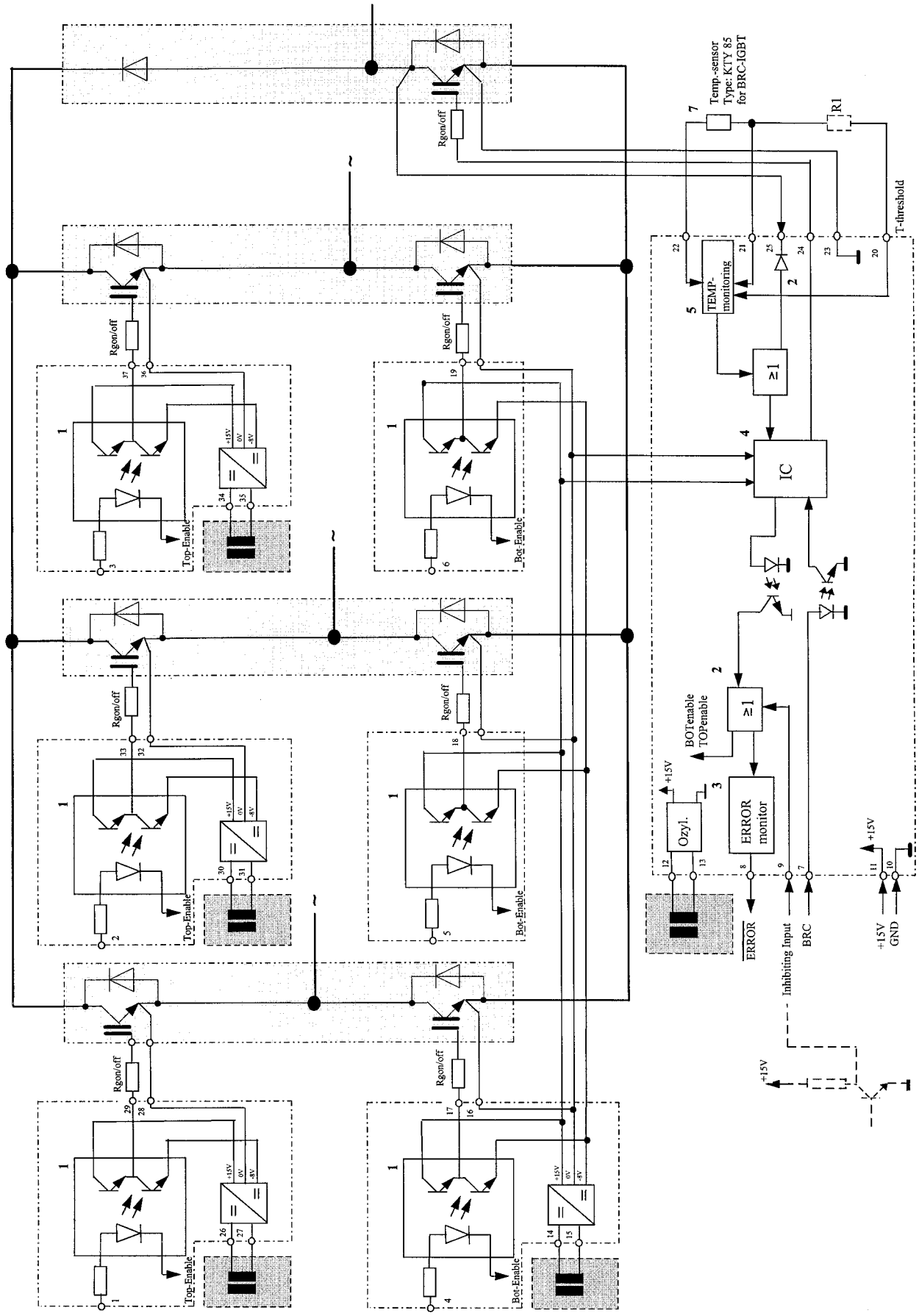

Description of the circuit block diagram SKHIBS 01
The circuit shows the minimal configuration for driving 6 inverter IGBTs and 1 brake chopper IGBTs.
The transformer delivers the insulated supply voltage for driving the IGBTs.
The regulation of these voltages is made on the subprint.
For each TOP IGBT + 15 V is used for switching on the IGBT,
- 8 V is used for switching off the IGBT.
The BOT IGBTs are supplied with one common power supply, + 15 V is used for switching on and - 8 V is used for switching off. The brake chopper IGBT is supplied due to the power supply used for the BOT switches.
For switching off the brake chopper IGBT 0 V is used. Switching on is made with + 15 V.

The driver kit SKHIBS 01 is able to drive SEMIKRON IGBTs up to I_C = 120 A specified at 25 °C.

Outline subprint

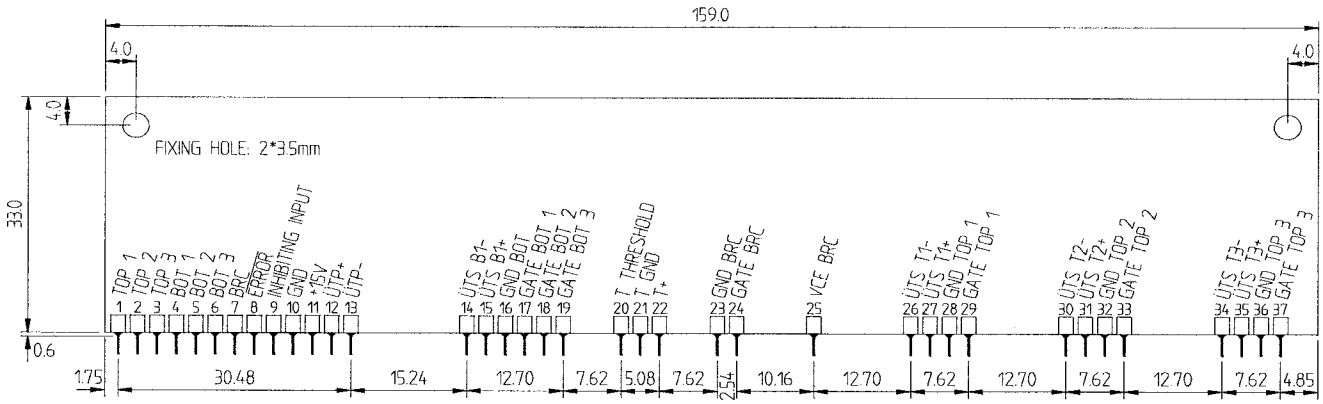

PIN-array subprint

Characteristics			
PIN	**symbol**	**term**	**remark**
1	TOP 1	input TOP 1	5 V / 10 mA (using 15 V input voltage; additional Rv = 1 kW necessary
2	TOP 2	input TOP 2	5 V / 10 mA (using 15 V input voltage; additional Rv = 1 kW necessary
3	TOP 3	input TOP 3	5 V / 10 mA (using 15 V input voltage; additional Rv = 1 kW necessary
4	BOT 1	input BOTTOM 1	5 V / 10 mA (using 15 V input voltage; additional Rv = 1 kW necessary
5	BOT 2	input BOTTOM 2	5 V / 10 mA (using 15 V input voltage; additional Rv = 1 kW necessary
6	BOT 3	input BOTTOM 3	5 V / 10 mA (using 15 V input voltage; additional Rv = 1 kW necessary
7	BRC	input brake chopper	5 V / 10 mA
8	$\overline{\text{ERROR}}$	output ERROR	open collector transistor (30 V / 10 mA)
9	Inhibiting Input	Inhibit signal	connected to open collector (max. 15 V)
10	GND	GND power supply	controlled power supply
11	+ 15 V	+ 15 V power supply	controlled power supply (15 V+ / -0.6 V)
12	ÜTP +	input voltage DC/DC converter	connected to PIN 1 transformer short distance for connection to transformer required
13	ÜTP -	input voltage DC/DC converter	connected to PIN 2 transformer short distance for connection to transformer required
14	ÜTS B1-	input voltage BOT DC/DC converter	connected to PIN 8 transformer short distance for connection to transformer required
15	ÜTS B1+	input voltage BOT DC/DC converter	connected to PIN 7 transformer short distance for connection to transformer required
16	GND BOT	GND BOT 1 - 3	
17	Gate BOT 1	output gate BOT 1	turn on + 15 V, turn off - 8 V
18	Gate BOT 2	output gate BOT 2	turn on + 15 V, turn off - 8 V
19	Gate BOT 3	output gate BOT 3	turn on + 15 V, turn off - 8 V
20	T THRESHOLD	input threshold voltage T_{BRC}	adjustable due to external resistor R1
21	T GND	GND for PIN 20 and 22	
22	T +	input temperature sensor	connected to BRC-Temp. sensor used in SEMIKRON devices MiniSKiiP 8
23	GND BRC	GND BRC	
24	Gate BRC	output gate BRC	turn on + 15 V, turn off 0 V
25	VCE BRC	VCE monitoring BRC	connected to collector BRC- IGBT
26	ÜTS T1-	input voltage TOP 1 DC/DC converter	connected to PIN 10 transformer short distance for connection to transformer required
27	ÜTS T1+	input voltage TOP 1 DC/DC converter	connected to PIN 9 transformer short distance for connection to transformer required
28	GND TOP 1	GND TOP 1	
29	Gate TOP 1	output gate TOP 1	turn on + 15 V, turn off - 8 V
30	ÜTS T2-	input voltage TOP 2 DC/DC converter	connected to PIN 12 transformer short distance for connection to transformer required
31	ÜTS T2+	input voltage TOP 2 DC/DC converter	connected to PIN 11 transformer short distance for connection to transformer required
32	GND TOP 2	GND TOP 2	
33	Gate TOP 2	output gate TOP 2	turn on + 15 V, turn off - 8 V
34	ÜTS T3-	input voltage TOP 3 DC/DC converter	connected to PIN 14 transformer short distance for connection to transformer required
35	ÜTS T3+	input voltage TOP 3 DC/DC converter	connected to PIN 13 transformer short distance for connection to transformer required
36	GND TOP 3	GND TOP 3	
37	Gate TOP 3	output gate TOP 3	turn on + 15 V, turn off - 8 V

Features of subprint

1. Introduction

Before giving detailed informations about SKHIBS 01 a short description is given about the using of the subprint and the transformer.

a) Subprint together with the transformer describes the minimal configuration for driving 6 IGBT switches and 1 brake chopper IGBT. 6 Opto couplers are used for driving the IGBTs of the inverter circuit.
Driving of the brake chopper IGBT is made with an integrated circuit, which allows the short circuit protection of this brake chopper IGBT due to V_{CE}-monitoring. The protection of the brake chopper against overtemperature, e.g. using the temperature sensor e.g. in MiniSKiiP 8 devices, can also be made.

b) The transformer supplies the insulated supply voltage. The 6 IGBT for the inverter are supplied with regulated + 15 V for switching on and -8V for switching off the IGBTs.
The 3 TOP-IGBTs have separate supply voltages. The 3 BOT-IGBTs have a common supply voltage.
This voltage is also used for driving the brake chopper IGBT, if in use.
Circuits on subprint provide the regulated voltages for switching the IGBTs.

c) SKHIBS 01 has no feature to protect the IGBTs against short circuit. But with the input PIN 9 „INHIBITING INPUT“ all inverter IGBTs can be made inactive, when the customers evaluation electronic delivers a fault signal, e.g. in short circuit condition.

d) The brake chopper IGBT of the subprint has a separate input PIN 7 „BRC“ for externally controlling of this IGBT in chopper mode.

2. Input circuit for inverter

The signal transfer to each IGBT is made with opto-couplers, used for switching on and switching off the IGBT. When using 5 V inputsignal (TTL-logic), no additional resistor in series to the input is necessary.

Using positive 15 V input voltage an additional resistor R_v = 1 kW have to be connected in series to the inputs.

Because no interlock of TOP and BOT switch in each halfbridge is made on the subprint, the controller have to provide this interlock. Deadtime of interlock should be t_{TD} > 3 msec.

Please observe: No interlock will destroy the IGBT when switching.

There are no gate resistors Rgon/off provided on the subprint.
The max. output peak current IOUTpeak < 1,5 A have to considered, when fixing the gate resistors.
The minimum permissible gate resistor is Rg = 18 W. 18 kHz < f_{sw} < 20 kHz
15 W. 16 kHz < f_{sw} < 18 kHz
12 W < 16 kHz switching frequency

3. INHIBITING signal

Therefore the SKHIBS 01 has no protection against short circuit it will be possible to disconnect the low voltage side from high voltage side in case of a fault condition due to the input PIN 9 „INHIBITING INPUT". In case of fault condition the INHIBITING INPUT signal have to be turned to LOW signal (set to GND).
When the INHIBITING signal is short in time, an internal circuit extent a short pulse to 1 ms.
The INHIBITING signal sets the $\overline{\text{ERROR}}$ output PIN 8 from LOW to HIGH level.

The power supply for the inverter IGBTs as well as the brake chopper IGBT, will also be disconnected, when the brake chopper IGBT driver circuit creates an $\overline{\text{ERROR}}$ signal caused either due to VCE-monitoring or overtemperature monitoring of the brake chopper IGBT.

4. $\overline{\text{ERROR}}$ monitoring

The Error output PIN 8 „$\overline{\text{ERROR}}$" is an open collector transistor (max. 30 V / 10 mA).
In case of an $\overline{\text{ERROR}}$ (either external fault information via the input PIN 9 „INHIBITING INPUT" or because of an

internal fault information (created on subprint) the $\overline{\text{ERROR}}$ output PIN 8 is set to HIGH level.
When there is a fault condition, transferred due to the INHIBITING INPUT signal, the $\overline{\text{ERROR}}$ output is active until the INHIBITING INPUT is > 5 V (Umax. = + 15 V).
When PIN 8 „$\overline{\text{ERROR}}$" is active due to the V_{CE}-monitoring or overtemperature sensing of the brake chopper, the $\overline{\text{ERROR}}$ output is active until the input signal PIN 7 „BRC" is set to LOW level (OV) for t > 1msec.

5. brake chopper driver

The brake chopper driver IC transfers the on and off signals to the brake chopper IGBT.
Switching on of the IGBT is made with + 15 V, switching off is made with 0 V.
This IC also monitors the V_{CE}-voltage of the brake chopper. If there is a short circuit, the V_{CE}-monitoring delivers a error signal at PIN 8 "$\overline{\text{ERROR}}$" when the voltage exceed typ. 5.3 V.
When the brake chopper is not in use, input PIN 7 „BRC" have to be set to „GND" (PIN 10).
Also the input on secondary side PIN 25 „V_{CE} BRC" have to be connected to „GND" (PIN 23).

Temperature monitoring (Brake chopper only)

Also an $\overline{\text{ERROR}}$ signal will be transferred to the $\overline{\text{ERROR}}$ output PIN 8 „$\overline{\text{ERROR}}$", when the temperature exceeded a value, fixed by the customer (factory adjusted: max. T_{TRIP} = 115 °C + / - 5 °C).
This circuit evaluates the overtemperature of a thermal resistor type KTY 85 (Philips), which is soldered on the DCB ceramic of SEMIKRON MiniSKiiP 8 devices.
When this temperature is not in use, input PIN 21 „T GND“ have be connected to PIN 22 „T+“.

Factory adjusted the overtemperature detection is fixed to 115 °C heatsink temperature.
Due to the paralleling of the external resistor R1 between PIN 20 „T THRESHOLD“ and PIN 21 „GND“ the threshold level can be adjusted, according to the following table.

Ttrip heatsink	calculated resistor R1	recommended resistor R1 (E96)
50 °C	3.54 kW	3.57 kW
60 °C	4.41 kW	4.42 kW
70 °C	5.69 kW	5.62 kW
80 °C	7.70 kW	7.68 kW
85 °C	9.22 kW	9.31 kW
90 °C	11.38 kW	11.30 kW
95 °C	14.66 kW	14.70 kW
100 °C	20.26 kW	20.50 kW
105 °C	31.98 kW	31.60 kW
110 °C	70.19 kW	69.80 kW

Table 2: trip level for temperature protection; accuracy = + / - 5 °C

Transformer

Preliminary Data

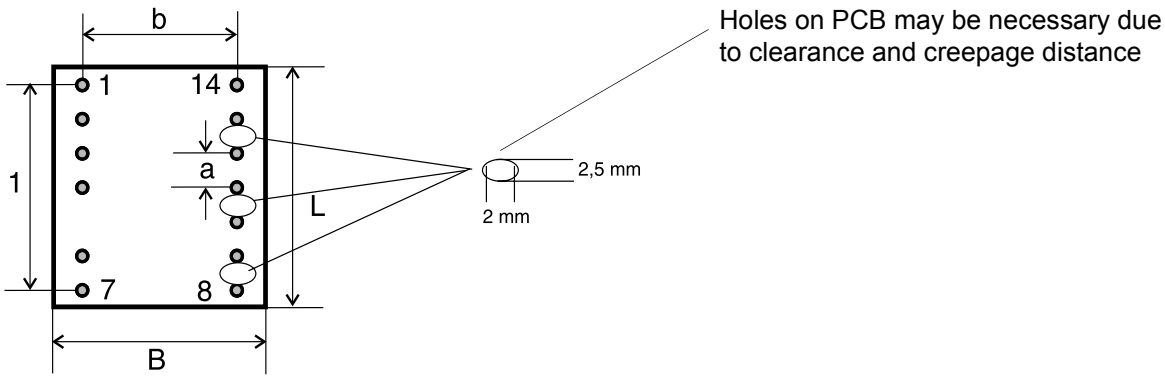

Fig. 3 Outline transformer

Dimensions			
term		**value**	**unit**
PIN dimension		QU. 0.7	mm
length	L	35.4	
width	B	31.4	
height	H	< 25	
distance between pins	a	5.08	
distance between pins lines	b	22.86	
distance between pins 1 to 7 and pins 8 to 14	i	30.48	

PIN array

PIN number	term	remark
1	supply voltage (+ 15 V / 0 V)	connected to PIN 12 subprint (short distance for connection required)
2	supply voltage (+ 15 V / 0 V)	connected to PIN 13 subprint (short distance for connection required)
3	reserved	
4	reserved	
7	output voltage II (used for supply of BOT switches)	connected to PIN 15 subprint (short distance for connection required)
8	output voltage II (used for supply of BOT switches)	connected to PIN 14 subprint (short distance for connection required)
9	output voltage III (used for supply of TOP 1)	connected to PIN 27 subprint (short distance for connection required)
10	output voltage III (used for supply of TOP 1)	connected to PIN 26 subprint (short distance for connection required)
11	output voltage IV (used for supply of TOP 2)	connected to PIN 31 subprint (short distance for connection required)
12	output voltage IV (used for supply of TOP 2)	connected to PIN 30 subprint (short distance for connection required)
13	output voltage V (used for supply of TOP 3)	connected to PIN 35 subprint (short distance for connection required)
14	output voltage V (used for supply of TOP 3)	connected to PIN 34 subprint (short distance for connection required)

